Black Bear

ELECTRIC CHAIN HOIST

CE

CHENG DAY MACHINERY WORKS CO., LTD.

"Black Bear" Electric Chain Hoist (Hook Suspension Type)

MOTOR HOUSING
- Aluminum alloy casting, features rigid structure and light weight.
- Motor framed with radiate cooling fins, permits 40% (dual speed 40/20% , YSF-series15%) continuous rate.
- Totally enclosed construction, withstands harsh conditions such as chemical, and electro-plating environments etc.

MOTOR BRAKE
- "Electro-Magnetic Brake Controller" - a unique design in its field, R.O.C. Patent No.27417 features simultaneous motor braking upon switching off power even under full load.

LIMIT SWITCH
- Fitted at both top and bottom ends, switch off power automatically to prevent load chain from running out.

LOAD CHAIN
- Grade 80 case hardened alloy steel chain, endures harsh conditions such as rain, salt water and chemicals.

HOOK
- Hot forged high tensile steel, rigid and durable, 360° swivel, fitting with safety latch to assure safe lifting.

HOIST BRACKET
- Double high-tensile alloy steel plate bracket, features robust and durable construction.

MECHANICAL BRAKE
- Advanced design, assures firm and secure braking even under overload. In conjunction with motor brake, features "DOUBLE BRAKE SYSTEM" to secure safety and durability in hoist operation.

TRANSFORMER
- Power to pendant control transformed into 24V (1.8kw series) or 48V (3.7kw series) ensures safe operation in case of circuit short.

MAGNETIC CONTACTOR
- High performance non-fuse circuit breakers allow frequent and trouble free operation.

PHASE ERROR RELAY
- A specially designed current-post, prevents motor from running at incorrect wire connection.

PUSH BUTTON PENDANT
- Offers light and durable switching controls.

LOAD CHAIN

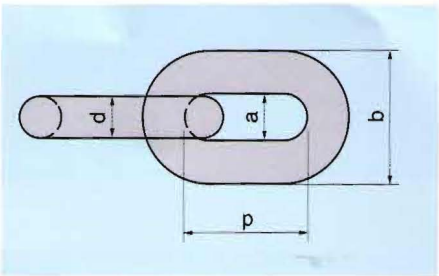

Diameter (mm)d	Model Chain Being Used	Inside Length (mm)p	Inside Width (mm)a	Outside Width (mm)b	Working Load (kg)	Proofing Load (kg)	Breaking Load (kg)
ø7.1	050-300 YSE YSL YSF YSH YL(H)T	20.2	8.9	23.6	1600	3150	6300
ø10.0	YSS(T)-200 YSS(T)-300	30.0	12.5	33.2	3150	6300	12500
ø11.2	YSS(T)-250 YSS(T)-500 YSS-750 YSS-1000 YSS-1500 YSS-2000 YSS-3000	34.0	14.0	37.2	4000 -	8000	16000

HOOK

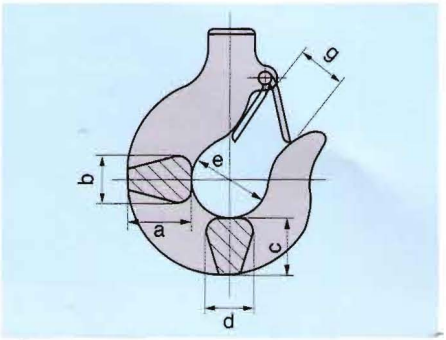

Model	Capacity (ton)	T / B	Dimensions (mm) a	b	c	d	e	g
YSL,H,E,F	0.5, 1	T B	33	23	29	23	40	28
YSL,H,E,F	2	T B	45	31	41	31	46	36
YSL,H	3	T B	55	34	48	34	52	43
YSS	2, 2.5, 3	T B	55	34	48	34	52	43
	5	T B	67	45	60	45	62	45
	7.5	B	75	48	68	48	75	57
	10	B	100	65	95	60	100	65
	15	B	120	87	110	85	120	82
	20	B	140	100	130	95	140	95
	30	B	140	100	130	95	140	95

- T=Top hook / B=Bottom hook

Standard Accessories:

1. CHAIN BUCKET.....1PC.
2. CABLE.....3MS.
3. PUSH BUTTON SWITCH...1PC.

FEATURES OF YSE SERIES:

- Direct connection to power supply.
- A slipping clutch performs as mechanical brake for overload protection and limit switching.
- No limit switch nor limit spring, heightens to the utmost lifting space.
- Optional low voltage, 24 volt, control available.

Capacity (ton)		0.5	1	2
Lift Length (m)		3 (6) etc.		
Single Speed (m/min)	50HZ	6.7	4.7	2.3
	60HZ	8	5.6	2.8
Dual Speed (m/min)	50HZ	6.7 / 2.2	4.7 / 1.6	2.3/0.8
	60HZ	8.0 / 2.7	5.6 / 1.8	2.8 / 1.0
Motor Power (kw)		1.5		1.8
Motor Power (kw)		1.8 / 0.6		
Power Supply		3 Phase, 220V-600V, 50HZ,60HZ		
E. D Rating (%)		40		
Load Chain Fall Number		1		2
NW / GW (kg)		50.5 / 53		60.5 / 63
Packing LxWxH (cm)		60x57x33		
Msrmnt (cu, ft)		4		

FEATURES OF YLT/YHT/YST SERIES:

- Specially engineered structure combines hoist and trolley, for specific low headroom applications.
- Shortened overall height, allows higher lifting.

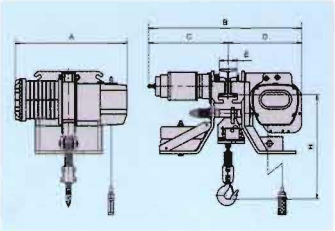

Model	Capacity (ton)	Dimensions (mm) H	A	B	C	D	E	Lift Speed (m/min) 50HZ	60HZ	Trolley Speed (m/min) 50HZ	60HZ	Flange Width (mm)
YLT-050	0.5	425	505	691	360	331	100	6.7	8.0	20	24, 16	75-125
YLTD-050			545					6.7/2.2	8.0/2.7	20/7	24/8	
YLT-100	1	425	505	691	360	331	100	4.7	5.6	20	24, 16	75-125
YLTD-100			545					4.7/1.6	5.6/1.8	20/7	24/8	
YLT-200	2	487	505	717	375	342	125	2.3	2.8	20	24, 16	100-150
YLTD-200			545					2.3/0.8	2.8/1.0	20/7	24/8	
YLT-300	3	593	505	781	418	363	125	1.5	1.8	20	24, 16	125-175
YLTD-300			545					1.5/0.5	1.8/0.6	20/7	24/8	
YHT-100	1	425	505	691	360	331	100	6.7	8.0	20	24, 16	75-125
YHTD-100			545					6.7/2.2	8.0/2.7	20/7	24/8	
YHT-200	2	487	505	717	375	342	125	3.3	4.0	20	24, 16	100-150
YHTD-200			545					3.3/1.1	4.0/1.3	20/7	24/8	
YHT-300	3	593	505	781	418	363	125	2.2	2.6	20	24, 16	125-175
YHTD-300			545					2.2/0.7	2.6/0.9	20/7	24/8	
YST-200	2	702	640	925	423	502	125	6.7	7.9	20	24, 16	125-175
YSTD-200			647					6.7/2.2	7.9/2.6	20/7	24/8	
YST-250	2.5	724	640	925	423	502	125	5.2	6.4	20	24, 16	125-175
YSTD-250			647					5.2/1.7	6.4/2.1	20/7	24/8	
YST-300	3	765	640	925	423	502	125	4.3	5.2	20	24, 16	125-175
YSTD-300			647					4.3/1.4	5.2/1.7	20/7	24/8	
YST-500	5	805	640	925	423	502	125	2.6	3.2	20	24, 16	125-175
YSTD-500			647					2.6/0.9	3.2/1.0	20/7	24/8	

※Maximum lifting height : 6M ※Motor: 50Hz=4P, 60Hz=4 or 6P.

DIMENSIONS OF HOIST WITH MOTORIZED TROLLEY

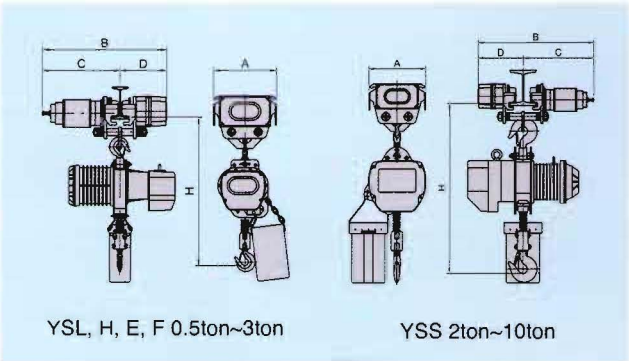

Capacity (ton)		Model	Dimensions (mm) H	A	B	C	D	Flange Width (mm)
YSL, H,E, YSF	0.5, 1	MT-050,100	680	295	541	345	196	75-125
	2	MT-200	890	323	567	358	209	100-150
YSL,H	3	MT-300	1030	359	662	417	245	125-175
YSS	2	MT-200	995	323	567	358	209	100-150
	3	MT-300	1120	359	662	417	245	125-175
	5	MT-500	1200	389	673	422	251	125-175
	7.5	MT-750	1300	454	736	465	271	150-200
	10	MT-1000	1415	560	821	550	271	150-200
	15	MT-1500	1490	695	885	595	290	190-215
	20	MT-2000	1820	885	1030	720	310	200

DIMENSIONS OF HOIST WITH / GT.PT

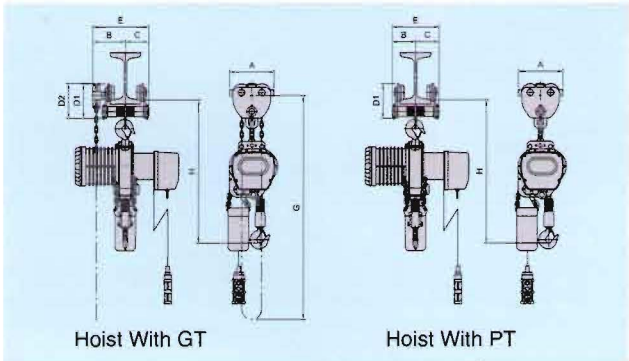

Capacity (ton)		Model	Dimensions (mm) H	A	B	C	D1	D2	E	G	Flange Width (mm)
YSL, H, YSE	1	GT-100	695	217	160	113.5	170	167	273	2719	75-150
	1	PT-100	695	217	113.5	113.5	167	-	227	-	75-150
	2	GT-200	875	247	179	130	224	207	309	3279	100-175
	2	PT-200	875	247	130	130	207	-	260	-	100-175
YSL, H	3	GT-300	1110	270	196	150	241	239	346	3353	100-200
	3	PT-300	1110	270	150	150	239	-	300	-	100-200
YSS	2	GT-200	1010	247	179	130	224	207	309	3279	100-175
	2	PT-200	1010	247	130	130	207	-	260	-	100-175
	3	GT-300	1175	270	196	150	241	239	346	3353	100-200
	3	PT-300	1175	270	150	150	239	-	300	-	100-200
	5	GT-500	1250	310	198	152	235	251	350	3356	125-200
	5	PT-500	1250	310	151	152	251	-	304	-	125-200

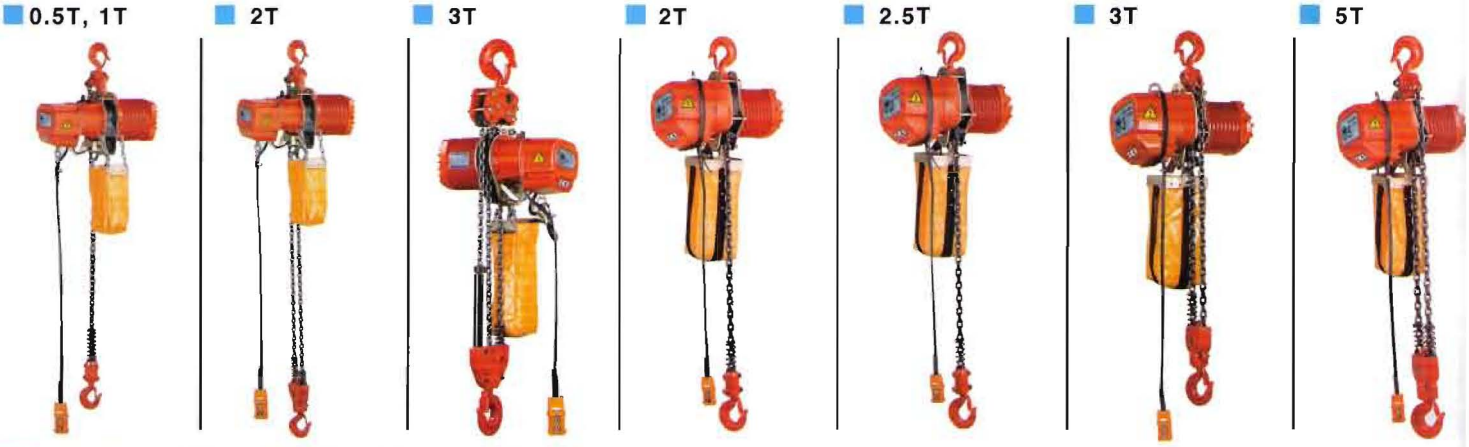

FEATURES OF "Black Bear" HOISTS:

- Pendant control voltage transformed into 24V/48V to eliminate possible accident caused by circuit short and assure safe operation in wet environments.
- Automatic motor brake system features simultaneous braking upon power failure or switching off.
- Dual brake system assures safe operation.

SPECIFICATIONS:

Capacity (ton)			0.5	1	2	0.5	1	2	0.5	1	2	3	2	2.5	3	5	7.5	10	15	20	30
Lift Height (m)			3 (6) etc.																		
Load Chain (mm)			ø7.1			ø7.1			ø7.1				ø10	ø11.2	ø10	ø11.2					
Single Speed (m/min)	50HZ	YSF	5.6	3.9	2.0	6.7	4.7	2.3	-	-	-	-	-	-	-	-	-	-	-	-	-
		YSL	-	-	-	-	-	-	6.7	4.7	2.3	1.5	-	-	-	-	-	-	-	-	-
		YSH	-	-	-	-	-	-	(9.2)	(6.7)	3.3	2.2	-	-	-	-	-	-	-	-	-
		YSS	-	-	-	-	-	-	-	-	-	-	6.6	5.2	4.3	2.6	1.8	2.6	(1.8)	1.3	0.9
	60HZ	YSF	6.7	4.7	2.3	8.0	5.6	2.8	-	-	-	-	-	-	-	-	-	-	-	-	-
		YSL	-	-	-	-	-	-	8.0	5.6	2.8	1.8	-	-	-	-	-	-	-	-	-
		YSH	-	-	-	-	-	-	(11.0)	(8.0)	4.0	2.6	-	-	-	-	-	-	-	-	-
		YSS	-	-	-	-	-	-	-	-	-	-	7.9	6.4	5.2	3.2	2.1	3.2	(2.1)	1.5	1.1
Dual Speed (m/min)	50HZ	YSLD	-	-	-	-	-	-	(6.7 / 2.2)	(4.7 / 1.6)	2.3 / 0.8	1.5 / 0.5	-	-	-	-	-	-	-	-	-
		YSHD	-	-	-	-	-	-	(9.2 / 3.1)	(6.7 / 2.2)	3.3 / 1.1	2.2 / 0.7	-	-	-	-	-	-	-	-	-
		YSSD	-	-	-	-	-	-	-	-	-	-	6.6 / 2.2	5.2 / 1.7	4.3 / 1.4	2.6 / 0.9	1.8 / 0.6	2.6 / 0.9	1.8 / 0.6	1.3 / 0.43	0.9 / 0.3
	60HZ	YSLD	-	-	-	-	-	-	(8.0 / 2.7)	(5.6 / 1.8)	2.8 / 1.0	1.8 / 0.6	-	-	-	-	-	-	-	-	-
		YSHD	-	-	-	-	-	-	(11 / 3.7)	(8 / 2.7)	4 / 1.3	2.6 / 0.9	-	-	-	-	-	-	-	-	-
		YSSD	-	-	-	-	-	-	-	-	-	-	7.9 / 2.6	6.4 / 2.0	5.2 / 1.7	3.2 / 1.0	2.1 / 0.7	3.2 / 1.0	2.1 / 0.7	1.5 / 0.5	1.1 / 0.4
Motor Power (kw)			1.8			1.8			1.5 (1.8)		1.8		3.7					3.7 x 2	5.0(3.7)x2		5.0 x 2
Motor Power (kw)			-			-			1.8 / 0.6				3.7 / 1.2					3.7/1.2 x 2	5.0 / 1.7 x 2		
Power Supply			Single Phase 110V, 115V			Single Phase 220V, 230V			3 Phase, 220V - 600V				3 Phase, 220V - 600V								
E.D. Rating (%)			15			15			40				40								
Load Chain Fall Number			1		2	1		2	1		2	3	1		2		3	4	6	8	12
N.W. / G.W. (kg)			55 / 58.5		64.5 / 67	55 / 58.5		65 / 67	50.5 / 53		61 / 64	73 / 96	125 / 155	130 / 160	140 / 170	153 / 183	195 / 230	410 / 470	510 / 580	890 / 990	1035/1135
Packing LxWxH (cm)			60x57x33			60x57x33			60x57x33			62x52x50	73x57x51				73x70x70	86x80x75	140x85x97	170x105x167	175x110x185
Msrmnt (Cu.ft)			4			4			4			5.7	7.5				12.63	18.23	40.8	105.3	125.8

※Dual speed E.D. Rating = 40/20%.

7.5T

10T

15T

20T

30T

- Limit switches hold load chain from running out.
- Advanced phase error relay keeps motor motionless at incorrect power connection
- Optional emergency stop features available.
- Optional electronic overload protection available.

SPECIFICATIONS:

Capacity (ton)	Model	Dimensions (mm)																			
		H	A					B				C	D	E	F	I	J	K	L	M	N
0.5	YSL, H, E, F-050	570	E550	505	F548	LD548	HD548	245	F288	LD288	HD288	260	240	115	125	40	28	40	28	23	23
1	YSL, H, E, F-100	570	E550	505	F548	LD548	HD548	245	F288	LD288	HD288	260	240	115	125	40	28	40	28	23	23
2	YSL, H, E, F-200	700	E665	505	F548	LD548	HD548	245	F288	LD288	HD288	260	240	175	65	46	36	46	36	31	31
3	YSL , H-300	880	-	505	-	LD548	HD548	245	-	LD288	HD288	260	280	175	105	52	43	52	43	34	34
2	YSS-200	835	-	640	-	-	SD650	326	-	-	SD336	314	448	278	170	52	43	52	43	34	34
2.5	YSS-250	880	-	640	-	-	SD650	326	-	-	SD336	314	448	278	170	52	43	52	43	34	34
3	YSS-300	960	-	640	-	-	SD650	326	-	-	SD336	314	448	340	108	52	43	52	43	34	34
5	YSS-500	1030	-	640	-	-	SD650	326	-	-	SD336	314	448	356	92	62	45	62	45	45	45
7.5	YSS-750	1050	-	640	-	-	SD650	326	-	-	SD336	314	587	388	199	72	40	75	57	84	48
10	YSS-1000	1270	-	640	-	-	SD650	326	-	-	SD336	314	970	485	485	72	40	100	68	92	60
15	YSS-1500	1365	-	640	-	-	SD650	326	-	-	SD336	314	1360	680	680	80	40	120	90	169	85
20	YSS-2000	1700	-	866	-	-	SD866	433	-	-	SD433	433	1472	736	736	82	82	140	95	164	95
30	YSS-3000	1700	-	924	-	-	SD924	462	-	-	SD462	462	1472	736	736	92	92	140	95	221	95

DIMENSIONS OF HOOK SUSPENSION TYPE HOIST:

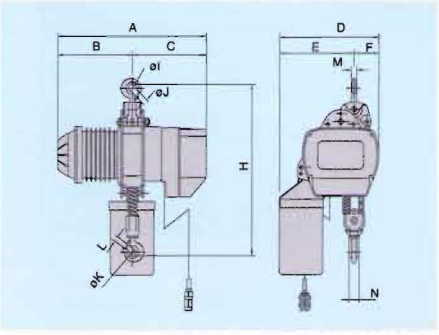

YSL, YSH, YSE, YSF, YSS

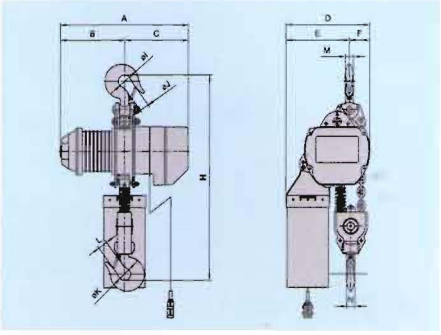

YSS-500

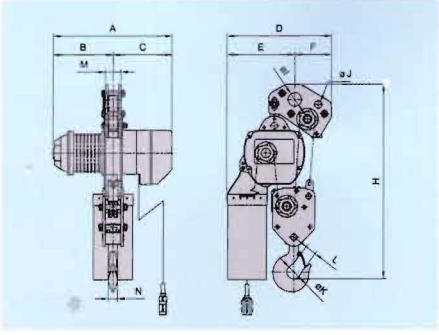

YSS-750

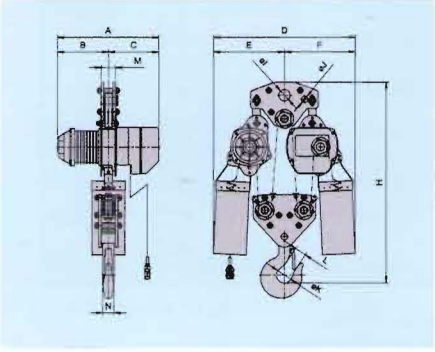

YSS-1000

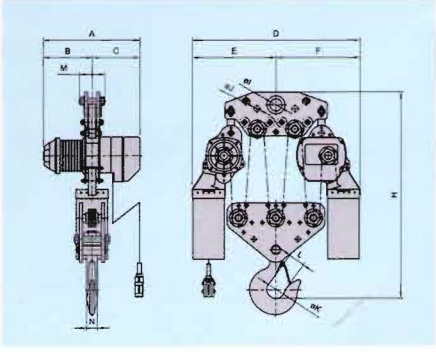

YSS-1500

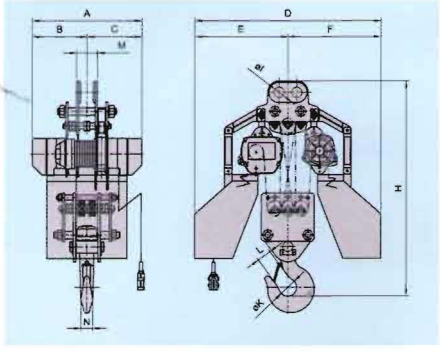

YSS-2000, YSS-3000

TROLLEY

PLAIN TROLLEY

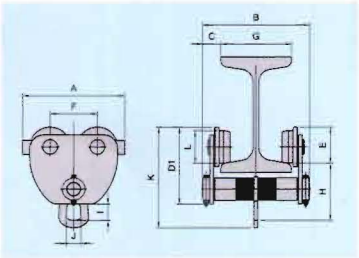

Dimensions (mm) PT															
Capacity (ton)	Model	A	B	C	D_1	E	F	H	I	J	K	L	Flange Width G	N.W. (kg)	Min radius of curve (m)
0.5	PT-050	194	220	35	151	69	89	115	33	28	198	60	50-150	6.4	1.0 m
1	PT-100	217	227	39	167	78	100	124	35	31	218	70	75-150	10.6	1.0 m
2	PT-200	247	260	43	207	91	116	171	55	56	284	80	100-175	16.8	1.3 m
3	PT-300	270	300	50	239	103	130	215	79	60	353	90	100-200	25.8	1.5 m
5	PT-500	310	304	52	251	117	140	218	84	60	370	100	125-200	32.6	1.6 m
7.5	PT-750	368	343	72	292	135	184	260	103	76	435	120	150-200	59.5	2.2 m
10	PT-1000	398	350	75	322	152	197	275	105	76	467	140	150-200	81.4	2.2 m

GEARED TROLLEY

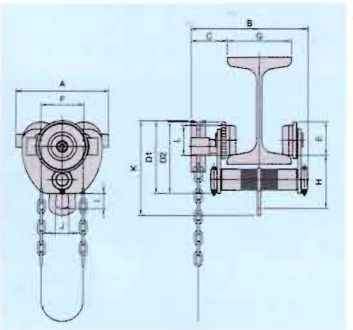

Dimensions (mm) GT															
Capacity (ton)	Model	A	B	C	D_1	D_2	E	F	H	I	J	K	L	Flange Width G	N.W. (kg)	Min radius of curve (m)
0.5	GT-050	194	266	81	150	151	69	89	115	33	28	198	60	50-150	8.8	1.0 m
1	GT-100	217	273	85	170	167	78	100	124	35	31	221	70	75-150	13.5	1.0 m
2	GT-200	247	309	92	224	207	91	116	171	55	56	301	80	100-175	19.8	1.3 m
3	GT-300	270	346	96	241	239	103	130	215	79	60	355	90	100-200	30.3	1.5 m
5	GT-500	310	350	98	235	251	117	140	218	84	60	370	100	125-200	37	1.6 m
7.5	GT-750	368	386	110	280	292	135	184	260	103	76	435	120	150-200	64	2.2 m
10	GT-1000	398	389	114	301	322	152	197	275	105	76	467	140	150-200	86	2.2 m

MONORAIL MOTORIZED TROLLEY

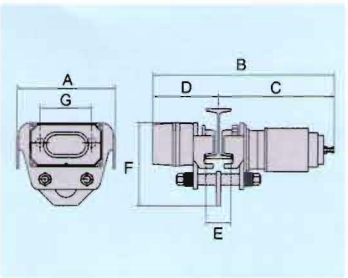

Dimensions / Specifications (mm) MT															
Capacity (ton)	Model	A	B	C	D	F	G	Flange Width E	Speed (m/min) 50HZ	Speed (m/min) 60HZ	Motor (kw)	Pole (P)	Min radius of curve	N.W. (kg)
1	MT-100	295	541	345	196	246	149	75-125	20	24, 16	0.25	4, 6	1.3m	40
	MTD-100								20/7	24/8	0.25/0.08	4/12		
2	MT-200	323	567	358	209	272	161	100-150	20	24, 16	0.25	4, 6	1.5m	45
	MTD-200								20/7	24/8	0.25/0.08	4/12		
3	MT-300	359	662	417	245	297	172	125-175	20	24, 16	0.6	4, 6	1.8m	65
	MTD-300								20/7	24/8	0.6/0.2	4/12		
5	MT-500	389	673	422	251	320	183	125-175	20	24, 16	0.6	4, 6	2.0m	89
	MTD-500								20/7	24/8	0.6/0.2	4/12		
7.5	MT-750	454	736	465	271	530	228.3	150-200	13	16	0.9	6	3.0m	155
	MTD-750								13/6.5	16/8	0.9/0.45	6/12		
10	MT-1000	560	821	550	271	565	277.3	150-200	14	17	1.5	6	3.5m	218
	MTD-1000								14/7	17/8.5	1.5/0.75	6/12		
15	MT-1500	692	878	589	289	530	353	190	10	12	1.5	6	-	350
	MTD-1500								10/5	12/6	1.5/0.75	6/12		
20	MT-2000	882	1025	719	306	604	439.6	200	12	15	2.2	4	-	575
	MTD-2000								12/4	15/5	2.2/0.73	4/12		

MT-100~500 : 50HZ uses 4P motor ; 60HZ uses 4P or 6P motor.
(Please specify as ordering 6P motor.)

MOTOR SADDLE TROLLEY (MST)

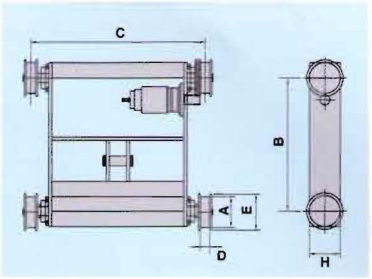

Dimensions / Specifications (mm) MST													
Capacity (ton)	Model	Speed (m/min) 50HZ	Speed (m/min) 60HZ	A	B	C	D	E	H	Motor (kw)	Pole (P)	N.W. (kg)
1	MST-100	20	19	120	580	700	40	147	122.5	0.25	4	94
	MSTD-100	20/6.7	19/6.3							0.25/0.08	4/12	
2	MST-200	20	19	120	580	700	40	147	122.5	0.25	4	94
	MSTD-200	20/6.7	19/6.3							0.25/0.08	4/12	
3	MST-300	18	22	150	650	850	45	178	155	0.6	6	182
	MSTD-300	18/9	22/11							0.6/0.3	6/12	
5	MST-500	18	22	150	650	850	45	178	155	0.6	6	182
	MSTD-500	18/9	22/11							0.6/0.3	6/12	
7.5	MST-750	19	23	160	800	1000	50	187	225	0.9	4	306
	MSTD-750	19/6.3	23/7.7							0.9/0.3	4/12	
10	MST-1000	21	20	215	900	1200	50	246	327.5	0.9-2pcs	4	504
	MSTD-1000	21/7	20/6.7							0.9/0.3-2pcs	4/12	

MST-100
MST-200
MST-1000

50HZ with pinion of M3.5x15T
60HZ with pinion of M3.5x12T

MODELS AVAILABLE:

Capacity (ton)			0.5 T	1 T	2 T	2.5T	3 T	5 T	7.5 T	10 T	15 T	20 T	30 T
3 Phase	Slipping Clutch	YSE	YSE-050	YSE-100	YSE-200								
	Low Speed	YSL	YSL-050	YSL-100	YSL-200		YSL-300						
			YLT-050	YLT-100	YLT-200		YLT-300						
	High Speed	YSH	YSH-050	YSH-100	YSH-200		YSH-300						
			YHT-050	YHT-100	YHT-200		YHT-300						
	Heavy Duty	YSS			YSS-200	YSS-250	YSS-300	YSS-500	YSS-750	YSS-1000	YSS-1500	YSS-2000	YSS-3000
		YST			YST-200	YST-250	YST-300	YST-500					
	Dual Speed	YSED	YSED-050	YSED-100	YSED-200								
		YSLD	YSLD-050	YSLD-100	YSLD-200		YSLD-300						
		YLTD	YLTD-050	YLTD-100	YLTD-200		YLTD-300						
		YSHD	YSHD-050	YSHD-100	YSHD-200		YSHD-300						
		YHTD	YHTD-050	YHTD-100	YHTD-200		YHTD-300						
		YSSD			YSSD-200	YSSD-250	YSSD-300	YSSD-500	YSSD-750	YSSD-1000	YSSD-1500	YSSD-2000	YSSD-3000
		YSTD			YSTD-200	YSTD-250	YSTD-300	YSTD-500					
Single Phase		YSF	YSF-050	YSF-100	YSF-200								

CHAIN BUCKET NO. SELECTION TABLE

Model	Chain size (mm)	Lift (m)																										
		≦4	≦5	≦6	≦6	≦7	≦8	≦9	≦9	≦10	≦12	≦13	≦15	≦16	≦18	≦19	≦20	≦23	≦25	≦26	≦27	≦30	≦31	≦38	≦40	≦47	≦50	≦60
YSF-050 YSE(D)-050 YSL(D)-050 YSH(D)-050	ø7.1						#2					#3			#5-1		#4					#5-3			#5-4		#5-5	#5-6
YSF-100 YSE(D)-100 YSL(D)-100 YSH(D)-100	ø7.1						#2					#3			#5-1		#4					#5-3			#5-4		#5-5	#5-6
YSF-200 YSE(D)-200 YSL(D)-200 YSH(D)-200	ø7.1	#2		#3				#5-1		#4	#5-2		#5-3				#5-4		#5-5			#5-6						
YSL(D)-300 YSH(D)-300	ø7.1	#3		#4	#5-1		#5-2			#5-3				#5-5			#5-6											
YSS(D)-200	ø10.0						#6										#7			#8-1		#8		#9		#10		
YSS(D)-250	ø11.2						#6								#7	#8-1					#8		#9		#10			
YSS(D)-300	ø10.0	#6								#7		#8-1	#8			#9		#10							#11			
YSS(D)-500	ø11.2	#6						#7		#8-1		#8	#9				#10								#11			
YSS(D)-750	ø11.2			#7	#8-1			#8		#9		#10								#11								
YSS(D)-1000	ø11.2							#7	#8-1			#8	#9				#10								#11			
YSS(D)-1500	ø11.2			#7	#8-1			#8		#9		#10								#11								
YSS(D)-2000	ø11.2					#12					#13																	
YSS(D)-3000	ø11.2		#12				#13																					

Bucket No.	Bucket size(mm)	Material
#2	150x100x1250L	canvas
#3	150x100x380L	canvas
#4	150x100x470L	canvas
#5-1	210x140x345L	steel
#5-2	210x140x465L	steel
#5-3	210X160X545L	steel
#5-4	210X160X665L	steel
#5-5	210x170x815L	steel
#5-6	210x170x975L	steel
#6	190x190x310L	canvas
#7	190x190x440L	canvas
#8	190x190x560L	canvas
#8-1	340x210x495L	steel
#9	400x210x605L	steel
#10	400x210x695L	steel
#11	400x210x1105L	steel
#12	400x500x660L	steel
#13	400x500x870L	steel

* There are 2 chain bucket with hoist above 10 tons.

POWER SUPPLY:

- The "Black Bear" electric chain hoist suits the majority of 3-phase power in different countries. Available in 50Hz, or 60Hz, voltage from 200V up to 600V and 110V or 220V/ 230V of 1-phase.
- Dual-voltage hoists are subject to factory confirmation.

LIFTING HEIGHT:

- Standard lifting height: 3 Meters / 6 Meters.
- Optional height available upon request (may be charged extra according to load chain length).

LIFTING SPEED:

- Please refer to each detailed specification.

PUSH BUTTON PENDENT:
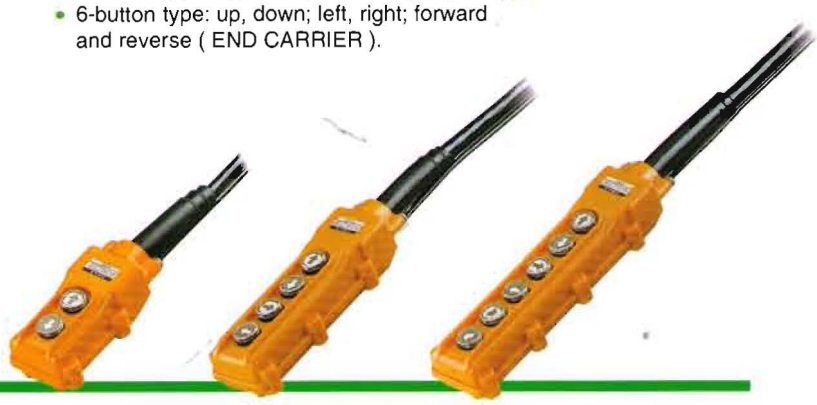
- 2-button type: up and down.
- 4-button type: up, down; left and right (trolley).
- 6-button type: up, down; left, right; forward and reverse (END CARRIER).